Corner Protector BCP-2

To protect building corners, doorways
as well as vehicles and cargo.
Also protects racks and shelving.

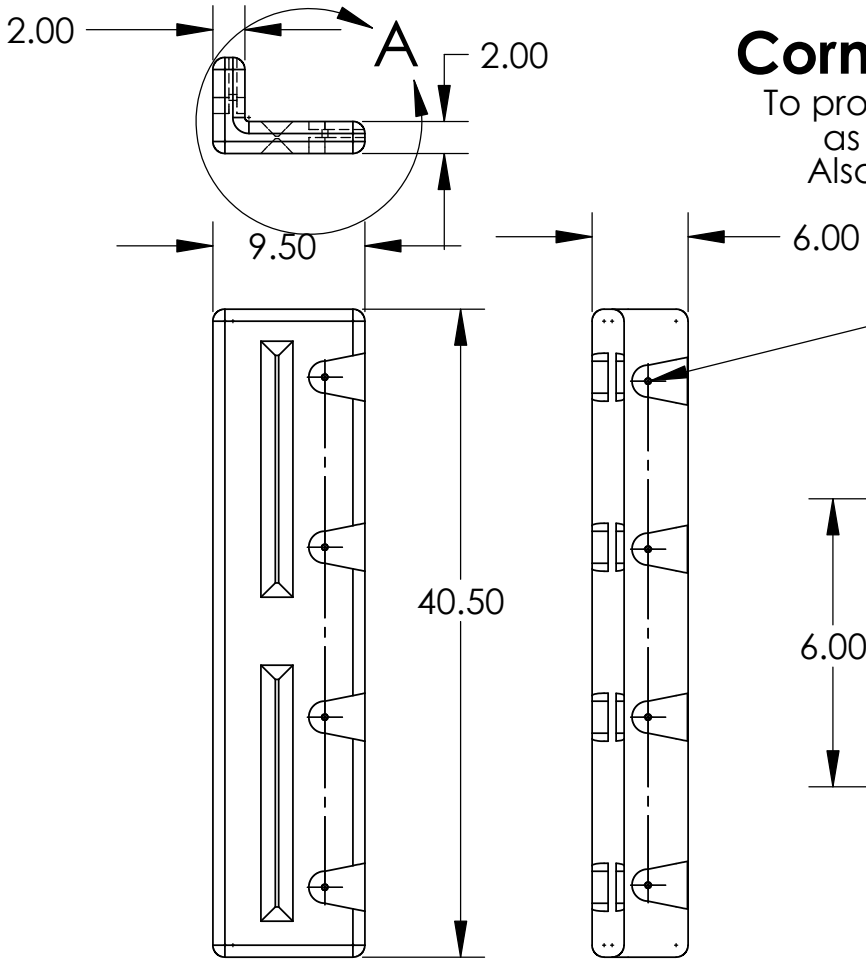

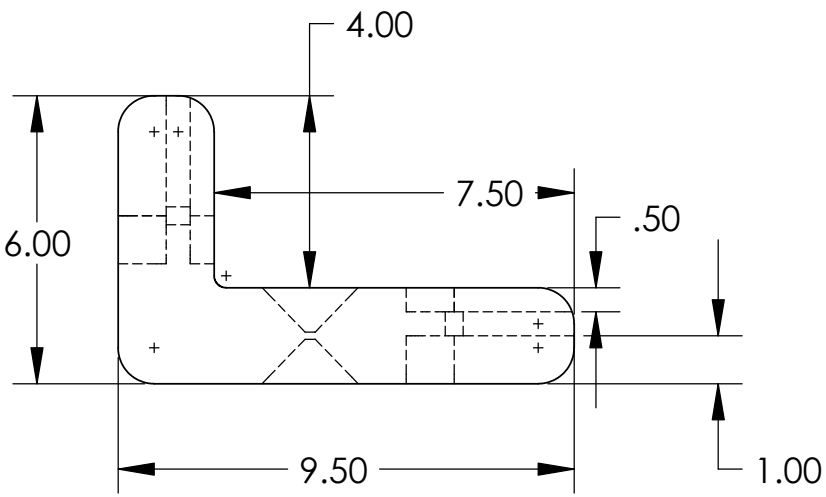

DETAIL A

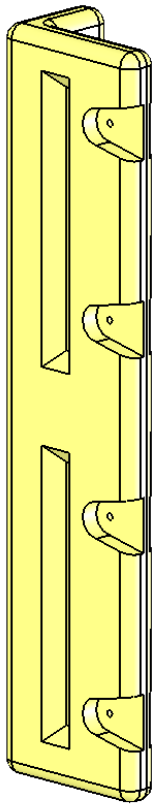

Material - LLD Polyethylene
Color - Yellow
Weight - 6 lbs

Sold in pairs

PROPRIETARY AND CONFIDENTIAL

The information contained in this drawing is the sole property of DIXIE POLY DRUM CORP. Any reproduction in part or as a whole without the written permission of DIXIE POLY DRUM CORP. is prohibited.

Approval		
Dept.	NAME	DATE

DIXIE POLY DRUM CORP.

TITLE:

Corner Protector BCP-2

SIZE	DWG. NO.	REV
A		

SHEET 1 OF 1

5 4 3 2 1